1209 DISTRIBUTORS ROW ■ NEW ORLEANS, LA 70123 U.S.A
TELEPHONE: (504)340-0055 ■ FAX: (504)340-0056

SV-1
Double Check Valve Model SV-1
FEATURES:

* Stainless Steel construction (N.A.C.E. Model Available)
* All soft seal design.
* Large Cv factors produce large flow rates.
* Small compact design.
* Simple operation allows for easy reapir.

GENERAL DESCRIPTION:

The Ruelco 'SV-1' double check valve is designed to act as a dual port non-return valve. Flow enters from both inlet ports on each side of the valve. Only the inlet with the higher pressure may flow through to the outlet port. The 17-4 stainless steel construction allows for high corrosion resistance in harsh environments. The SV-1 was designed with a high flow rate in mind with the orifice being equal to 1/4" I.D. tubing. The SV-1 can be disassembled and repaired without the need for special tools.

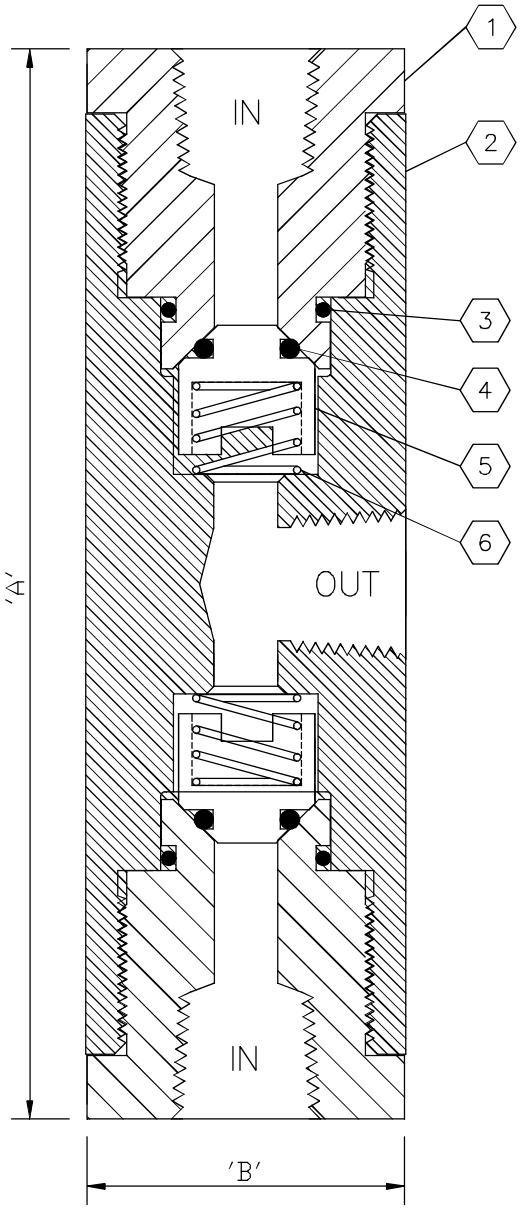

Parts List For SV-1 Shuttle Valve

ITEM	QTY.	DESCRIPTION	MATERIAL	PART NUMBER
1	2	CAP	17-4 ST. STL.	78-002-000
2	1	BODY	17-4 ST. STL.	78-100-000
3*	2	O-RING	VITON	V0-014-V90
4*	2	O-RING	VITON	V0-010-V70
5	2	POPPET	17-4 ST. STL.	78-003-000
6	2	SPRING	316 ST. STL.	78-005-000
7	1	REPAIR KIT	* ITEMS	78-101-000

SPECIFICATIONS P.S.I. (BAR)

VALVE BODY MAX. W.P.	10,000 (689.5)
CRACKING PRESSURE	5 (0.34)
AMBIENT TEMP. RANGE	-20 TO 250° F -29 TO 122° C
Cv FACTOR	2.0

DIMENSIONS INCH (MM)

"A"	3.67 (93.22)
"B"	1.25 (31.8)
PORT SIZE	1/4" NPT
WEIGHT	18.6 OZ. (527.30 g.)

ORDERING CODE: 7802 X 10000

BASE MODEL NUMBER

Standard Corrosive Service -- (-)
N.A.C.E. option ---N

WHILE THIS INFORMATION IS PRESENTED IN GOOD FAITH AND BELIEVED TO BE ACCURATE, RUELCO, INC. DOES NOT GUARANTEE SATISFACTORY RESULTS FROM RELIANCE ON SUCH INFORMATION. NOTHING CONTAINED HEREIN IS TO BE CONSTRUED AS A WARRANTY OR GUARANTEE, EXPRESSED OR IMPLIED, REGARDING THE PERFORMANCE, MERCHANTABILITY, AND FITNESS WITH RESPECT TO THE PRODUCT. RUELCO, INC. RESERVES THE RIGHT, WITHOUT NOTICE, TO ALTER OR IMPROVE THE DESIGNS OR SPECIFICATIONS OF THE PRODUCTS