Ruelco

PR-4 Push to Charge Relay

Model 1P02

1-800-229-7835
ruelco@ruelco.com

PR-4

Push to Charge Relay

FEATURES

- 316 Stainless steel construction (models to N.A.C.E. MR0175 available).
- Easy to close with pilot signal pressures as high as 100 psi.
- Can be repaired without removing relay from system or panel.
- "Lock Closed" design prevents relay from automatically opening.
- Viton and nitrile seals are utilized for dependability.
- Design minimizes malfunctions due to supply system debris.
- Inconel X-750 springs assures dependability in most corrosive environments (optional 30 PSI spring available).

OPTIONS

- 30 psi closing spring
- Stem protector to prevent external debris accumulation on relay shaft
- Black or red knob colors (green is standard)

GENERAL DESCRIPTION:

The Ruelco PR-4 push to charge relay is a multi-pressure control valve for production control and safety systems. It functions as a pilot operated, normally closed, in to out valve. It's simple and compact design makes maintenance and repair easy. The PR-4 relay does not need to be removed from its control panel or system loop if repair or maintenance is necessary.

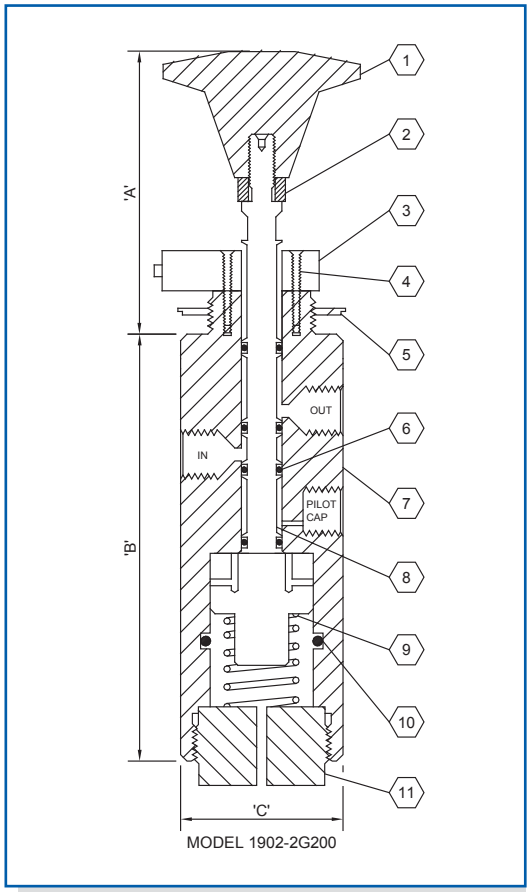

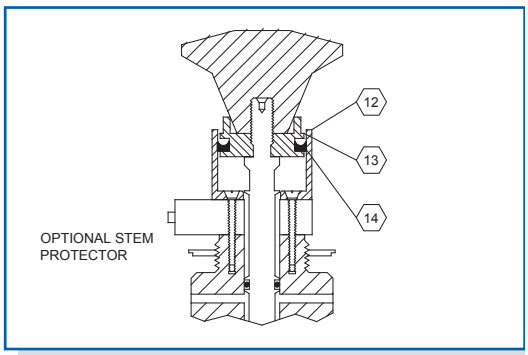

Parts List For PR-4 Relay

ITEM	QTY.	DESCRIPTION	MATERIAL	PART No.
1A	1	BLACK KNOB	PHENOLIC	Z0-200-001
1B	-	RED KNOB	PHENOLIC	Z0-200-002
1C	-	GREEN KNOB	PHENOLIC	Z0-200-003
2	1	LOCK NUT	316 ST. STL.	T6-08K-0F3
3	1	DETENT ASSEMBLY	316 ST. STL.	10-005-000
4	2	SCREW	316 ST. STL.	T3-632-0G3
5	1	PANEL MOUNT NUT	316 ST. STL.	10-006-000
6*	4	SHAFT SEAL	VITON	VO-009-75H
7	1	BODY	316 ST. STL.	19-001-PRB
8A	1	SHAFT WITH DELRIN PISTON	316 ST. STL. WITH DELRIN	19-003-DNP
8B	-	S.S. PISTON	316 ST. STL.	19-003-SSP
9A	1	20 PSI SPRING	INCONEL X-750	10-024-000
9B	-	30 PSI SPRING	INCONEL X-750	10-017-000
10*	1	BODY SEAL	VITON	VO-119-75T
11	1	BASE	316 ST. STL.	10-021-0B0
12	1	STEM PROTECTOR HOUSING	DELRIN	10-015-000
13	1	SEAL WASHER	DELRIN	10-016-000
14#	1	STEM PROTECTOR SEAL	NITRIL	NU-210-70H
15	-	REP. KIT W/O PROTECTOR	* ITEM	19-004-PRK
16	-	REP. KIT W/PROTECTOR	* & # ITEM	19-005-PRK

Dimension Inch (MM)

"A" (OPEN/CLOSED)	2.36/2.73 (60/69.3)
"B"	3.94 (100.1)
"C"	1.50 (38.1)
PORT SIZE	1/4" NPT
PANEL MOUNT HOLE	1.0 (25.4)
MAX. PANEL THICKNESS	.18 (4.6)
WEIGHT	2 LBS (0.91 KG)

Specifications PSI. (Bar)

VALVE BODY MAX. W.P.	150 (10.3)
PILOT CAP MAX. W.P.	150 (10.3)
AMBIENT TEMP. RANGE	-20 TO 250° F -29 TO 122° C
MINIMUM PILOT SIGNAL PRESSURE TO HOLD RELAY OPEN	25 (1.7) WITH 20 PSI SPRING 35 (2.4) WITH 30 PSI SPRING
Cv FACTOR	.34

Ordering Code: 1P02 X X X X X 0

BASE MODEL NUMBER

Standard Corrosive Service --- (-)
N.A.C.E. option --- N

Detent --- 2
Detent Replacement --- 8

Black Knob --- B
Red Knob --- R

S --- With St. Stl. Piston
P --- With Stem Protector
O --- Without Stem Protector
T --- With options P & S above

2 --- 20 psi Closing Spring
3 --- 30 psi Closing Spring

While this information is presented in good faith and believed to be accurate, Ruelco, Inc. does not guarantee satisfactory results from reliance upon such information. Nothing contained herein is to be construed as a warranty or guarantee, expressed or implied, regarding the performance, merchantability, and fitness with respect to the products. Ruelco, Inc. reserves the right, without notice, to alter or improve the designs or specifications of the products described herein.